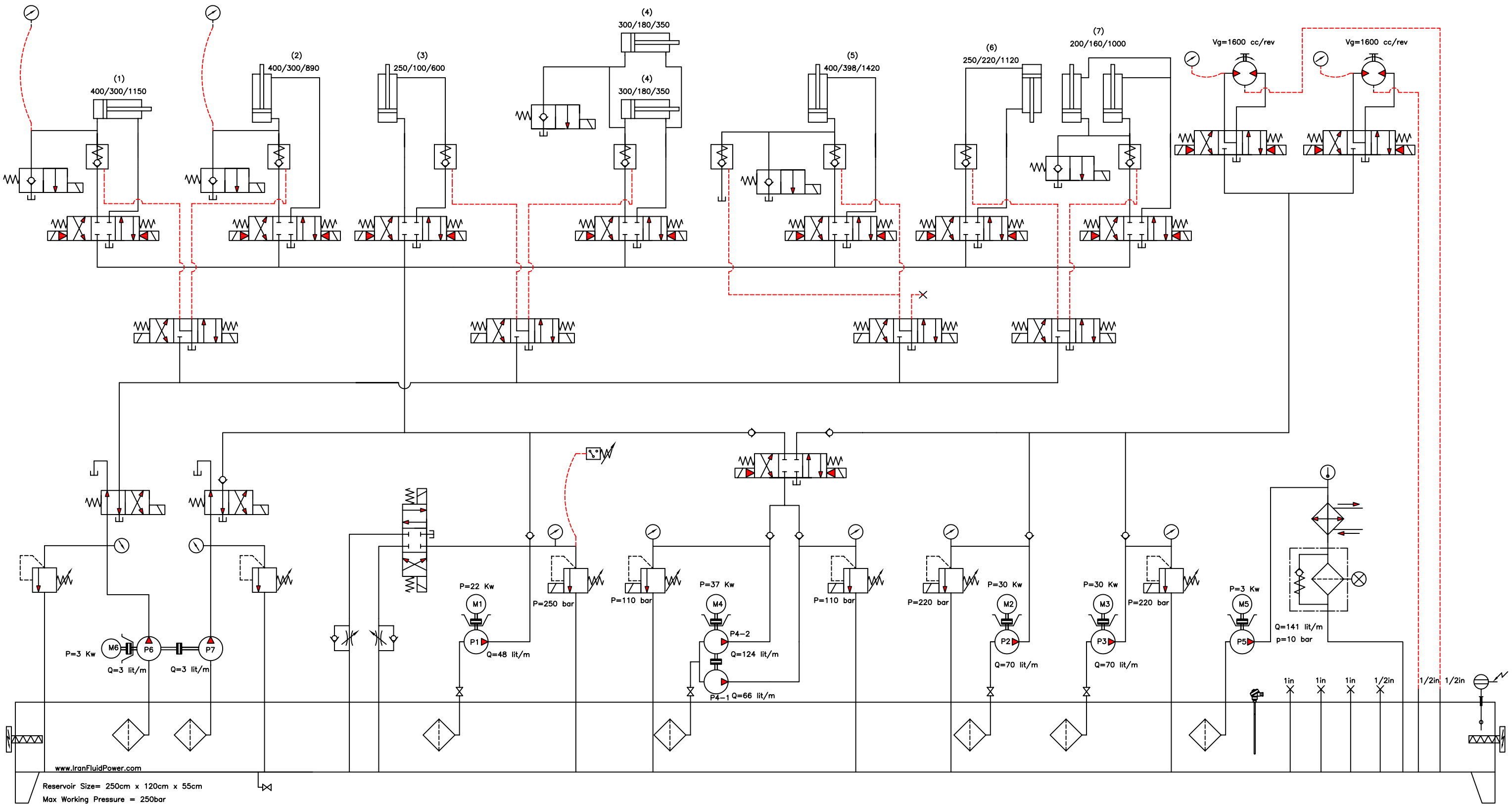
(1)
400/300/1150
(2)
400/300/890
(3)
250/100/600
(4)
300/180/350
(4)
300/180/350
(5)
400/398/1420
(6)
250/220/1120
(7)
200/160/1000
Vg=1600 cc/rev
Vg=1600 cc/rev
P=3 Kw
M6
P6
P7
Q=3 lit/m
Q=3 lit/m
P=22 Kw
M1
P1
Q=48 lit/m
P=250 bar
P=110 bar
P=37 Kw
M4
P4-2
Q=124 lit/m
P4-1
Q=66 lit/m
P=110 bar
P=220 bar
P=30 Kw
M2
P2
Q=70 lit/m
P=30 Kw
M3
P3
Q=70 lit/m
P=220 bar
P=3 Kw
M5
P5
Q=141 lit/m
p=10 bar
1in
1in
1in
1/2in
1/2in
1/2in
www.IranFluidPower.com
Reservoir Size= 250cm x 120cm x 55cm
Max Working Pressure = 250bar